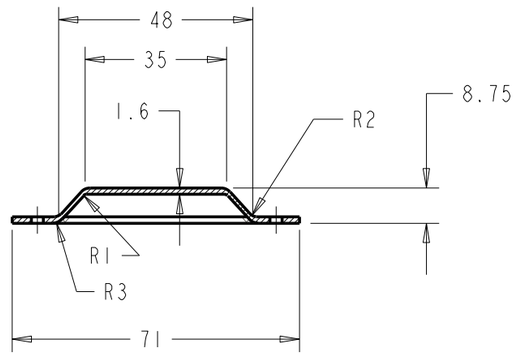


SECTION Z-Z

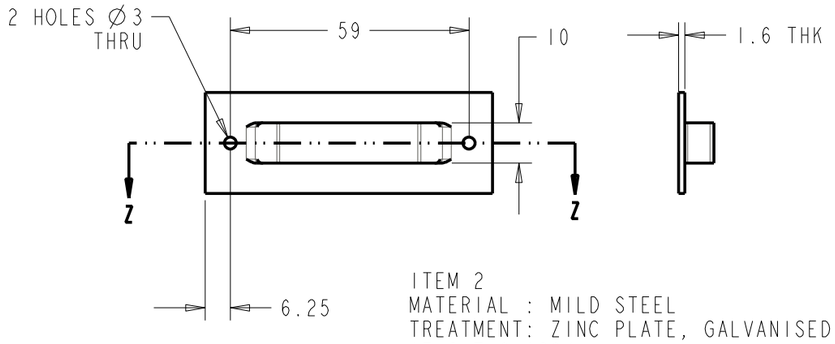


ITEM 2
MATERIAL : MILD STEEL
TREATMENT: ZINC PLATE, GALVANISED BLACK
WEIGHT 0.026Kg

ITEM 3
MATERIAL : MILD STEEL
TREATMENT: ZNC PLATE, GALVANISED BLACK
WEIGHT 0.033Kg

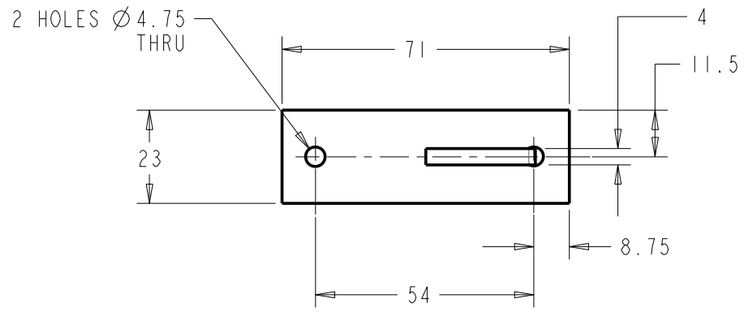


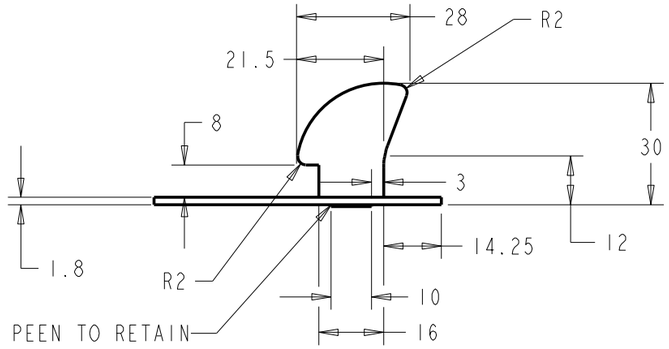


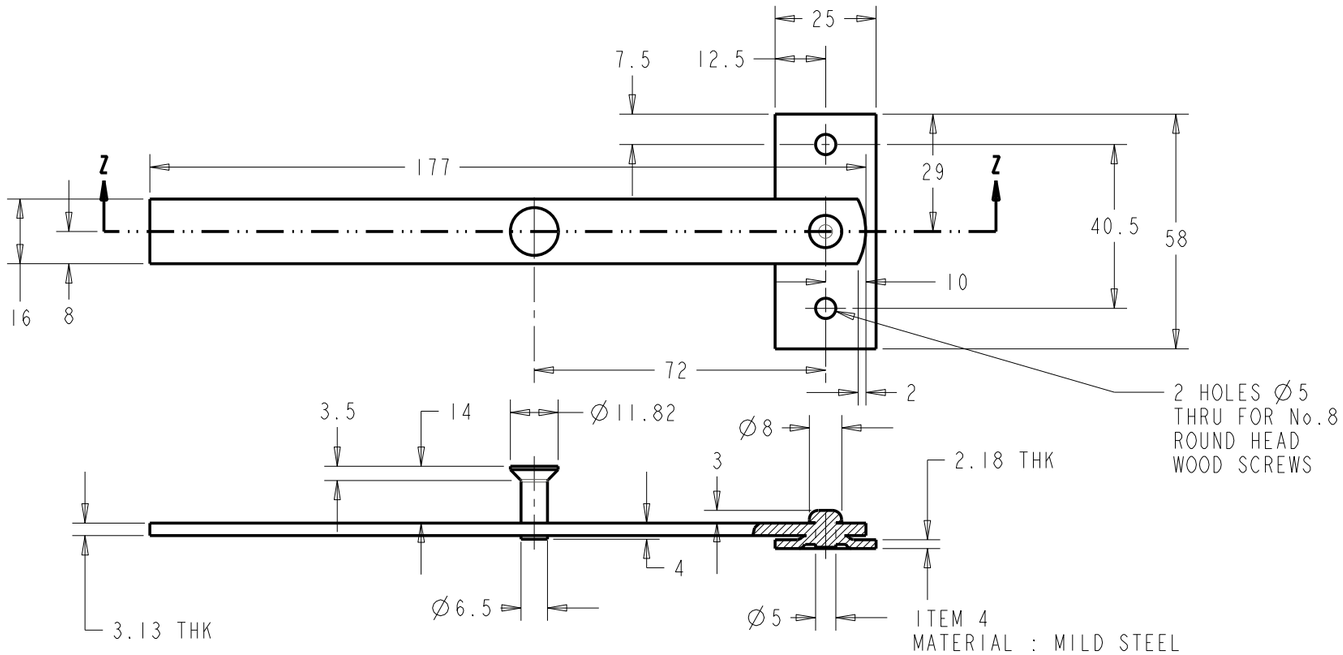


PART
SECTION Z-Z

ITEM 4
MATERIAL : MILD STEEL
TREATMENT : ZINC PLATE, GALVANISED BLACK
WEIGHT 0.099Kg

| | | |
|---|---|---|
| Unless Otherwise Stated, All Dimensions are in "mm" | | |
| Company Name<br>A.Perry and Co. (Hinges) Ltd<br>Address<br>Doulton Road, Cradley Heath, B64 5QW UK | | Product Name<br>20-25 |
| Drawn By- N.Hayward | Date 15-Jun-2010 | Item Weight 0.434Kg |
| Drawing is Copyright Protected | | |